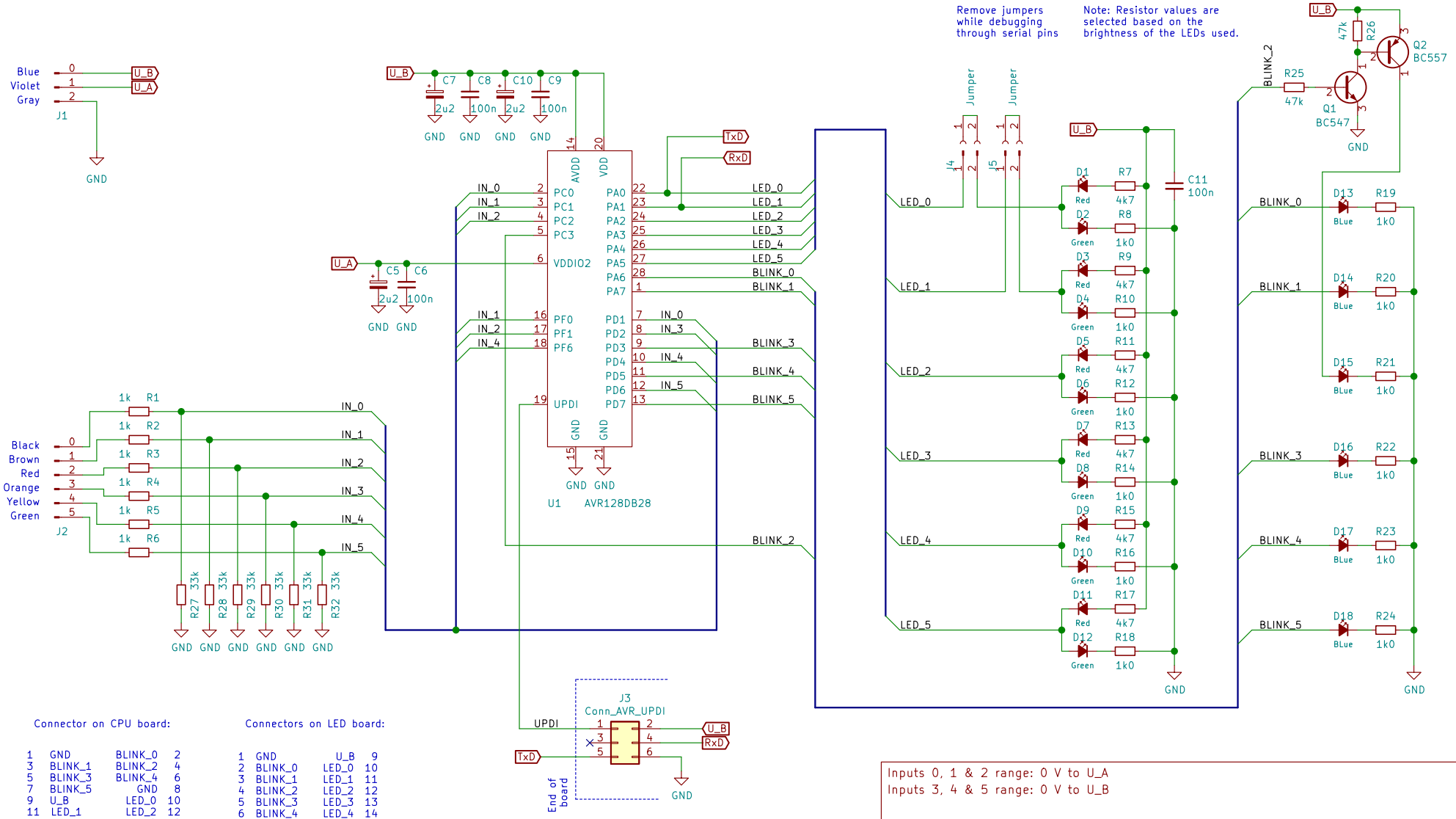

Connector on CPU board:

1	GND	BLINK_0	2
3	BLINK_1	BLINK_2	4
5	BLINK_3	BLINK_4	6
7	BLINK_5	GND	8
9	U_B	LED_0	10
11	LED_1	LED_2	12
13	LED_3	LED_4	14
15	LED_5	U_B	16
17	GND	GND	18
19	GND	GND	20

Connectors on LED board:

1	GND	U_B	9
2	BLINK_0	LED_0	10
3	BLINK_1	LED_1	11
4	BLINK_2	LED_2	12
5	BLINK_3	LED_3	13
6	BLINK_4	LED_4	14
7	BLINK_5	LED_5	15
8	GND	U_B	16

17, 18, 19, 20: GND

Inputs 0, 1 & 2 range: 0 V to U_A
Inputs 3, 4 & 5 range: 0 V to U_B

Henning Schou

Sheet: /
File: HexLogicSignalDetector.sch

Title: Hex Logic Signal Detector

Size: A4	Date: 2021-10-25	Rev: 001
KiCad E.D.A. kicad (5.1.10)-1		Id: 1/1